적용 도면 (Applied DRAW. No.)	
도면 변호 (DRAW. No.)	비 고 (Remarks)
1	
2	

MARK	DATE	DETAIL OF REVISION	CHECK	APP.

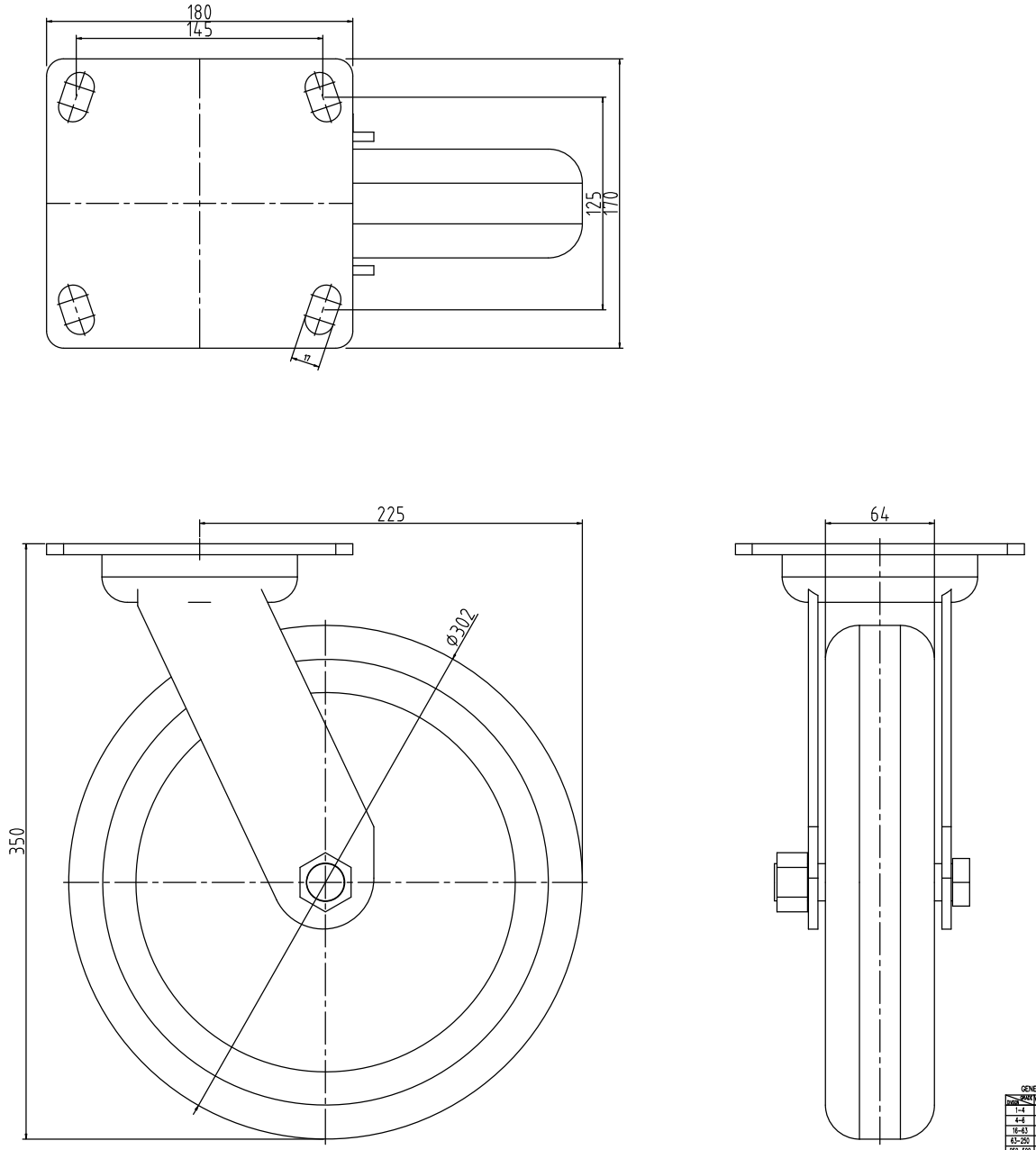

GENERAL TOLERANCE

DIVISION / SHAPE	A LEVEL	B LEVEL	C LEVEL
1~4	±0.05	±0.10	±0.25
4~6	±0.07	±0.20	±0.35
16~63	±0.10	±0.30	±0.50
63~250	±0.15	±0.55	±0.90
250~500	±0.35	±0.90	±1.50
500~1000	±0.50	±1.50	±2.50

부 품 번 Part No.	번호 No.	명 칭 Part Name	갯수 Qt'y	재 질	비 고 Remarks
DRAWN	CHECKED	CHECKED	APPROVED	SCALE 1/1	MODEL:
				UNIT:	TITLE:
광일엔지니어링 KWANGL ENGINEERING				SIZE: A1	MODEL No.
				DATE:	DWG No.